Paul Hastings
StayCurrent
A CLIENT ALERT FROM PAUL HASTINGS
June 2009

Key Provisions of the German Bad Bank Concept

BY HERGEN HAAS AND DR. CHRISTOPHER WOLFF

On May 13, 2009 the German cabinet introduced a draft bill known as the "Bad Bank" Act ("Draft Bill"). The proposed legislation will allow certain German institutions (each, a "Transferring Institution" or "German Bank", see 1 below) to transfer structured securities ("Structured Securities", see 2 below) to special purpose vehicles located in Germany to be incorporated by such institutions ("SPV" or "Bad Bank") in exchange for the issuance of new debt securities backed by the transferred Structured Securities from the special purpose vehicles to the Transferring Institutions ("Bonds"). The Governmental Rescue Fund ("SoFFin") may guarantee the Bonds ("SoFFin Guarantee" and the guaranteed Bond "Guaranteed Bond", see 3 below). The Transferring Institutions will have to pay to SoFFin a fee at market rate for the SoFFin Guarantee. The Structured Securities will be transferred to the SPVs at a value of 90% of their current book value ("Transfer Value", see 4 below). The Draft Bill requires the current economic value of the transferred Structured Securities to be determined ("Current Value", see 5 below). SoFFin will be entitled to discount or "haircut" the Current Value of particular Structured Securities if it determines that any additional risks might materialize in relation to such Structured Securities prior to their maturity. The resulting value is referred to in the Draft Bill as the "fundamental value" ("Fundamental Value", see 5 below). Under the Draft Bill the Transferring Institution will be obliged to pay to its related SPV a compensation payment in annual installments ("Annual Compensation Payment", see 6 below). The Annual Compensation Payment will be payable only and to the extent that the Transferring Institution has future distributable profits in the year in question. The Annual Compensation Payment is designed to compensate the SPV for the difference between the Transfer Value of the Structured Securities of the relevant Transferring Institution and their Fundamental Value.

On the maturity of any Guaranteed Bonds, the SPV will repay such Bonds from the proceeds received from the Structured Securities and the Annual Compensation Payment (together the "Proceeds"). Any positive balance between the assets and liabilities of such SPV will be paid to the Transferring Institutions for distribution to its shareholders. Conversely, if the Bonds cannot be repaid in full from the Proceeds and the SoFFin Guarantee will be drawn for the shortfall, such shortfall is to be paid by the Transferring Institution from its future distributable profits to SoFFin ("Shortfall"). With SoFFin's approval, such Shortfall can also be paid through the issuance of new shares in the Transferring Institution.

SoFFin may request that the Structured Securities held by a SPV will be managed by a third party instead of the relevant Transferring Institution and may further generally give instructions as to how they are to be managed and disposed of. If the Structured Securities are managed by the Transferring Institution, the Draft Bill requires that such management has to be functionally and organizationally separated from its other business. No further details are contained in the Draft Bill in relation to this. In particular, it is not clear from the Draft Bill whether any disposal of

Structured Securities by a SPV will require the consent of SoFFin. It seems, however, not unlikely that SoFFin may instruct SPVs not to dispose of any Structured Securities without their approval unless a certain disposal price is achieved.

Applications to participate in the "Bad Bank" scheme may be filed within 6 months following the publication of the proposed law in the *Federal Gazette*.

1. Transferring Institution

Only banks, financial holding companies or their subsidiaries are allowed to participate in the "Bad Bank" scheme. Banks and financial holding companies must be domiciled in Germany since at least 31 December 2008.

2. Structured Securities

Only structured securities and related security and other arrangements such as hedges or trust agreements are eligible to be transferred to the SPV unless the otherwise eligible assets have been purchased by the Transferring Institution after 31 December 2008. It will therefore not be possible to repackage impaired loans or other assets into a Structured Security, as such a Structured Security would be acquired after 31 December 2008. The legal materials accompanying the Draft Bill indicate that Structured Securities will usually be taken to mean highly complex transferable securities such as those that are typically issued in the securitization of a portfolio of debt receivables. As examples the materials mention Asset-Backed Securities (ABS), Collateralized Debt Obligations (CDO), CDOs of ABS, Collateralized Loan Obligations (CLO), Residential Mortgage- Backed Securities (RMBS) and Commercial Mortgage-Backed Securities (CMBS). Furthermore no Structured Security may mature after the maturity of the SoFFin Guarantee.

3. SoFFin Guarantee

3.1 SoFFin Guarantees must be applied for by the Transferring Institution. The application must be accompanied by the constitutive documentation of the SPV. The Transferring Institution must fully disclose all risks in connection with the Structured Securities to SoFFin, the independent expert who has to certify the Current Value of the Structured Securities (see 5 below) and the German Banking Supervisory Authority ("BaFin"). No further guideline as to how such disclosure should be undertaken is outlined in the Draft Bill. The application will be decided upon pursuant to Section 4 para 1 of the Financial Markets Stabilization Act. No claim of the Transferring Institution to receive a SoFFin Guarantee does exist.

3.2 SoFFin Guarantees are generally issued in Euro and can be drawn upon on first demand. They cover principal, interest and all other payment obligations of the relevant SPV to the creditors of the claim (i.e. the holders of the Guaranteed Bonds). SoFFin may also issue SoFFin Guarantees in other currencies but in such cases the currency risks will be hedged by SoFFin and the related Transferring Institution will have to bear the related cost. SoFFin Guarantees are limited in amount with a view to the aggregate amount of risk-weighted assets of the Transferring Institution and the SoFFin's financial capabilities.

3.3 The fee payable by a Transferring Institution to SoFFin for the SoFFin Guarantee will be at market rates ("Fee") and generally will consist of a percentage of the maximum amount of the SoFFin Guarantee, calculated to reflect the risk of loss, and a margin. The Fee can also be fully or partially be paid in shares in the Transferring Institution. In determining the Fee SoFFin will, in particular, take into consideration the difference between the Transfer Value on the one hand and the Current Value and Fundamental Value of the transferred Structured Securities of the Transferring Institution in question on the other hand.

3.4 Guaranteed Bonds will by reason of having the benefit of the SoFFin Guarantee carry a regulatory risk weighting of 0% and therefore no regulatory capital would need to be applied to them by any investor. In addition, the Guaranteed Bonds may be repoed to gain liquidity through the European Central Bank at the nominal value of the Guaranteed Bond, i.e. the Transfer Value.

3.5 In addition it should be mentioned that, among other provisions, Section 5 para 2 no. 1 and 3 to 5 of Financial Market Stabilization Ordinance apply *mutatis mutandis*, which means, among other things, that there will be certain public involvement and in particular pressure to restrict the remuneration of board members of the Transferring Institution to Euro 500,000 per annum.

4. Transfer Value

The Structured Securities are transferred to the SPV at a value of 90% of their current book value or at market value, if higher. The Draft Bill further provides that this 10 per cent. deduction is not to be made if and to the extent that, as a result, the core capital ratio (*Kernkapitalquote*) of the Transferring Institution would fall below 7%.

5. Fundamental Value

The Transferring Institution has to determine the Current Value of the Structured Securities, such value determination is to be certified by an independent expert (nominated by SoFFin), and confirmed by BaFin. The valuation may, as per the materials accompanying the Draft Bill, be carried out in accordance with general valuation models with the inclusion of discounted cashflows.

Such Current Value will be further reduced by SoFFin to create a cushion for any particular risks associated with the Structured Securities in question during their lifetime and this reduced figure is known as the Fundamental Value.

6. Annual Compensation Payment

The Transferring Institution has to pay to the SPV during the term of the SoFFin Guarantee, but for no longer than 20 years, a compensation payment in annual installments, payable only from its future distributable profits, and covering the difference between the Transfer Value of the Structured Securities and their Fundamental Value. This means that the difference between Transfer Value of the Structured Securities and their Fundamental Value will be divided by the number of full years of the duration of the SoFFin Guarantee with a minimum of 1 out of 20 of this difference. If and to the extent the distributable profits are not sufficient to fully pay such installment in any given year during the term of the SoFFin Guarantee, the payable installment for the following years will be increased accordingly.

Reception in the Market

1. The proposed Bad Bank Scheme has been subject to material criticism in the market. Apart from Hypo Real Estate AG, it appears that no German institution has, so far, expressed any interest in using this scheme. However, it seems to be likely that some of the German Landesbanken will participate in the Bad Bank concept, in particular such banks which have already received state aid.

2. One concern seems to be that, according to expert opinions, accounting-wise the proposed model may not lead to the intended risk transfer. This is because applicable GAAP may require Transferring Institutions to create a provision in their annual accounts for the (contingent) obligation to pay the Shortfall out of future earnings.

3. There are also concerns expressed that the European Commission would require individual state aid clearance approval for the adoption of the Bad Bank Scheme for each Transferring Institution.

4. Furthermore, there is a concern that the 10% "haircut" applied in the course of the transfer of the Structured Securities will lead to increasing problems as regards the core capital ratio (*Kernkapitalquote*). This arises despite the fact that the Draft Bill provides that the haircut will not be applied if, as a result, the core capital ratio would fall below 7%.

5. It is therefore likely that there will be changes to the current Draft Bill. The road map foresees that in mid of June experts will be heard in connection with the Draft Bill and it will become law in early July. However, it is unlikely that there will be material changes to the general concept of the “Bad Bank” scheme. It can therefore be expected that the Bad Bank Act will eventually continue to contain a concept that the imminent risks of Structured Securities

being shifted from the relevant Transferring Institutions to its shareholders (by means of requiring the payments to be made of out of future profits of such Transferring Institutions).

6. It may also be that similar schemes will be introduced to address issues with other impaired assets, i.e. loans.

Potential Strategies

In analyzing the Draft Bill it appears that the incentives provided may lead to different strategies, depending on whether the German Bank is publicly listed or state owned and whether it has already made use of other state aid. In the first place, only the latter are likely to participate in the scheme. If a publicly listed institution which has not yet made use of any state aid may wish to use the bad bank scheme (despite the resulting governmental involvement in the bank) it is likely that it will try to dispose of the Structured Securities as quickly as possible. If it would then draw upon the SoFFin Guarantee for a Shortfall, following an only partial repayment of the Guaranteed Bonds, it may seek to agree with SoFFin that instead of paying the Shortfall over time from its distributable profits it would pay the same in its own shares. By this means the existing shareholders would pay for the shortfall, but in the future shareholders could be attracted to invest in the bank by the fact that there is no further imminent risk of Structured Securities on the German Bank's balance sheet.

On the other hand, the state-owned banks will most likely decide to hold their Structured Securities in the SPV until their maturity.

German Bad Bank Model

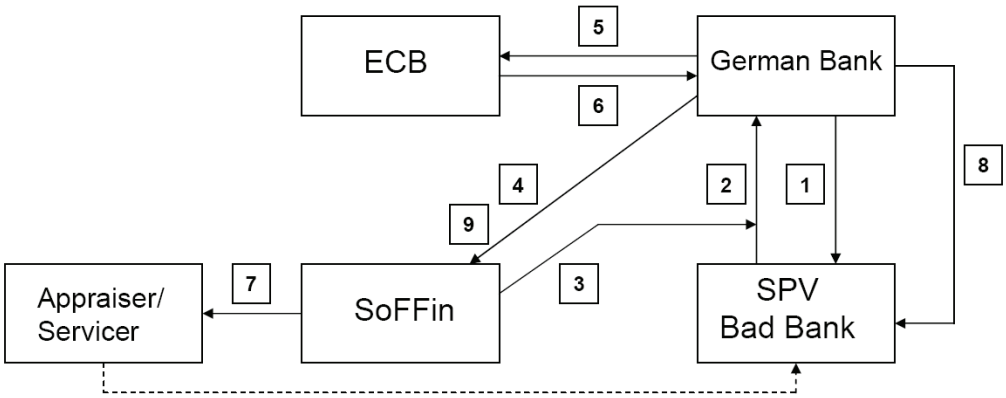

1___ Asset transfer of Structured Securities at Transfer Value (i.e. 90% of old book value)
2___ Bond issuance in the amount of the Transfer Value
3___ SoFFin Guarantee for Bond
4___ Fee for SoFFin Guarantee (may be paid by shares in the German Bank
5___ Guaranteed Bond will be repoed for Transfer Value
6___ 100% cash for Guaranteed Bond
7___ Appointment of appraiser for the determination of Market Value/Fundamental Value for SoFFin and of Servicer if SoFFin so requires for third party asset management of SPV
8___ Yearly equal instalments of difference between Transfer Value and Fundamental Value if German Bank generates distributable profits
9___ At the latest 20 years after SoFFin Guarantee issuance any loss to be borne by German Bank via its distributable profits or payment to SoFFin via equity participation in German Bank

✧ ✧ ✧

If you have any questions concerning these developing issues, please do not hesitate to contact any of the following Paul Hastings Frankfurt lawyers:

Hergen Haas
49-69-907485-111
hergenhaas@paulhastings.com

Dr. Christopher Wolff
49-69-907485-113
christopherwolff@paulhastings.com